Work Order ID 56668

March 4, 2010 11:02:57 AM

Item ID: D3696-041 **Accept** **Setup Start** **Stop**

Revision ID:

Item Name: Arm Assembly

Start Date: 3/04/10 **Start Qty:** 4.00 **Cust Item ID:**

Required Date: 3/12/10 **Req'd Qty:** 4.00 **Customer:**

Reference:

Approvals: **Process Plan:** **Date:** **Tooling:** **Date:** **Run Start** **Stop**

QC: **Date:** **SPC (Y/N):** **Date:**

Sequence ID/ Work Center ID	Operation Description	Set Up/ Run Hours	Draw Number	Draw Rev.	Plan Code	Accept Qty	Reject Qty	Reject Number	Insp. Stamp
Draw Nbr	**Revision Nbr**								
D3696	Rev C								
100		0.00							
Bandsaw	BAND SAW								
	Memo	0.00							
Jeaspa Bandsaw	Cut blank 17.750" long	JL 10/03/08							
110		0.00							
Mill Conv	CONVENTIONAL MILLING MACHINE								
	Memo	0.00							
Conventional Milling Machine	1- Mill as per dwg D3696 2-Deburr as per dwg D3696	JL 10/03/08				(4)			
120	QC2- Inspect parts off machine FAI/FAIB	0.00							
QC		JL 10/03/08							
	Memo	0.00							
Quality Control									

Dart Aerospace Ltd

W/O:		WORK ORDER CHANGES					
DATE	STEP	PROCEDURE CHANGE	By	Date	Qty	Approval Chief Eng / Prod Mgr	Approval QC Inspector

Part No: _____ **PAR #:** _____ **Fault Category:** _____ **NCR:** Yes No **DQA:** _____ **Date:** _____

Resolution: _____ **Disposition:** _____ **QA: N/C Closed:** _____ **Date:** _____

NCR:		WORK ORDER NON-CONFORMANCE (NCR)						
DATE	STEP	Description of NC Section A	Corrective Action Section B			Verification Section C	Approval Chief Eng	Approval QC Inspector
			Initial Chief Eng	Action Description Chief Eng	Sign & Date			

NOTE: Date & initial all entries

H:\fFORMS\Quality Assurance\approved QA\NCRWO RevE

Work Order ID 56668

March 4, 2010 11:02:57 AM

Item ID: D3696-041 **Accept** **Setup Start**

Revision ID: **Stop**

Item Name: Arm Assembly

Start Date: 3/04/10 **Start Qty:** 4.00 **Cust Item ID:**

Required Date: 3/12/10 **Req'd Qty:** 4.00 **Customer:**

Reference:

Run Start

Approvals: **Process Plan:** **Date:** **Tooling:** **Date:**

Stop

QC: **Date:** **SPC (Y/N):** **Date:**

Sequence ID/ Work Center ID	Operation Description	Set Up/ Run Hours	Draw Number	Draw Rev.	Plan Code	Accept Qty	Reject Qty	Reject Number	Insp. Stamp
130	QC8- Inspect parts - second check	0.00							
QC	**Memo**	0.00	LP 10/03/08			4	0		
Quality Control									
140	Chemical Conversion Coat per QSI005 4.1	0.00							
HandFinish	**Memo**	0.00	~~LP 10/03/08~~ MH 10/03/08			x4	~~0~~		
Hand Finishing									
150	Grey Sandtex(Ref:4.3.5.6) per QSI005 4.3	0.00							
Powdercoat	M112588 **Memo**	0.00	=> MH 10/03/10			x4	0		
Powder Coating	1- mask prior to painting as per dwg (see note 8) START TIME: 7:30 AM OVEN TEMPERATURE: 8:60 AM FINISH TIME: 370°F								

Dart Aerospace Ltd

W/O:		WORK ORDER CHANGES					
DATE	STEP	PROCEDURE CHANGE	By	Date	Qty	Approval Chief Eng / Prod Mgr	Approval QC Inspector

Part No: _____ **PAR #:** _____ **Fault Category:** _____ **NCR:** Yes No **DQA:** _____ **Date:** _____

Resolution: _____ **Disposition:** _____ **QA: N/C Closed:** _____ **Date:** _____

NCR:		WORK ORDER NON-CONFORMANCE (NCR)						
DATE	STEP	Description of NC Section A	Corrective Action Section B			Verification Section C	Approval Chief Eng	Approval QC Inspector
			Initial Chief Eng	Action Description Chief Eng	Sign & Date			

NOTE: Date & initial all entries

H:\fFORMS\Quality Assurance\approved QA\NCRWO RevE

Work Order ID 56668

March 4, 2010 11:02:57 AM

Item ID: D3696-041 **Accept** **Setup Start** **Stop**

Revision ID:

Item Name: Arm Assembly

Start Date: 3/04/10 **Start Qty:** 4.00 **Cust Item ID:**

Required Date: 3/12/10 **Req'd Qty:** 4.00 **Customer:**

Reference:

Approvals: **Process Plan:** _____ **Date:** _____ **Tooling:** _____ **Date:** _____ **Run Start** **Stop**

QC: _____ **Date:** _____ **SPC (Y/N):** _____ **Date:** _____

Sequence ID/ Work Center ID	Operation Description	Set Up/ Run Hours	Draw Number	Draw Rev.	Plan Code	Accept Qty	Reject Qty	Reject Number	Insp. Stamp
160	QC3- Inspect Part Finish	0.00							
QC	Memo	0.00							
Quality Control									
170		0.00							
Small Fab	Small Fab								
Small Fab	Memo	0.00							
	1-Install Helicoil□2-Press Bushing □3-Install Plunger								
180	QC5- Inspect part completeness to step on W/O	0.00							
QC	Memo	0.00							
Quality Control									

BR 10-3-10 4.

4X

=7 M.A 10/03/10

8 10/03/10 +4

Dart Aerospace Ltd

W/O:		WORK ORDER CHANGES					
DATE	STEP	PROCEDURE CHANGE	By	Date	Qty	Approval Chief Eng / Prod Mgr	Approval QC Inspector

Part No: _____ PAR #: _____ Fault Category: _____ NCR: Yes No DQA: _____ Date: _____

Resolution: _____ Disposition: _____ QA: N/C Closed: _____ Date: _____

NCR:		WORK ORDER NON-CONFORMANCE (NCR)						
DATE	STEP	Description of NC Section A	Corrective Action Section B			Verification Section C	Approval Chief Eng	Approval QC Inspector
			Initial Chief Eng	Action Description Chief Eng	Sign & Date			

NOTE: Date & initial all entries

H:\fFORMS\Quality Assurance\approved QA\NCRWO RevE

Work Order ID 56668

March 4, 2010 11:02:58 AM

Item ID: D3696-041 **Accept** **Setup Start**

Revision ID: **Stop**

Item Name: Arm Assembly

Start Date: 3/04/10 **Start Qty:** 4.00 **Cust Item ID:**

Required Date: 3/12/10 **Req'd Qty:** 4.00 **Customer:**

Reference:

Run Start

Approvals: **Process Plan:** _____ **Date:** _____ **Tooling:** _____ **Date:** _____

Stop

QC: _____ **Date:** _____ **SPC (Y/N):** _____ **Date:** _____

Sequence ID/ Work Center ID	Operation Description	Set Up/ Run Hours	Draw Number	Draw Rev.	Plan Code	Accept Qty	Reject Qty	Reject Number	Insp. Stamp
190	Identify as per dwg & Stock Location: 205	0.00							
Packaging	**Memo**	0.00					2/4/3/11		(4)
Packaging									
200	QC21- Final Inspection - Work Order Release	0.00					10/03/11		
QC	**Memo**	0.00							
Quality Control							MF 10-3-11		

Dart Aerospace Ltd

W/O:		WORK ORDER CHANGES					
DATE	STEP	PROCEDURE CHANGE	By	Date	Qty	Approval Chief Eng / Prod Mgr	Approval QC Inspector

Part No: _____ **PAR #:** _____ **Fault Category:** _____ **NCR:** Yes No **DQA:** _____ **Date:** _____

Resolution: _____ **Disposition:** _____ **QA: N/C Closed:** _____ **Date:** _____

NCR:		WORK ORDER NON-CONFORMANCE (NCR)						
DATE	STEP	Description of NC Section A	Corrective Action Section B			Verification Section C	Approval Chief Eng	Approval QC Inspector
			Initial Chief Eng	Action Description Chief Eng	Sign & Date			

NOTE: Date & initial all entries

H:\fFORMS\Quality Assurance\approved QA\NCRWO RevE

Picklist Print

March 4, 2010 11:02:55 AM

Work Order ID: 56668

Parent Item: D3696-041

Parent Item Name: Arm Assembly

Start Date: 3/04/10 **Required Date:** 3/12/10

Comments: IPP Rev:A New Issue 08-05-01 JLM Verified By:EC
IPP Rev:B 08-07-22 redesign part (prelim) DD verified by:EC

Start Qty: 4.00 **Required Qty:** 4.00

Component Item ID/ Item Name	Replacement Item ID	Mfg/ Purch	Bin Item	Primary Location	Last Location	Route Seq ID	Unit of Measure	Qty on Hand	Remaining Qty To Pick	Qty Issued	Date Issued	Status
D3799-1		Manufactured	No				Each	60.0000	4.0000			
Oilite Bronze Bushing												
				Warehouse Location		Loc Qty		Loc Code				
				Main Warehouse								
				ST		60						
				44915		60				4X	M-L 10/03/10	
D3801-3		Manufactured	No				Each	24.0000	4.0000			
Hand Retractable Spring Plunger												
				Warehouse Location		Loc Qty		Loc Code				
				Main Warehouse								
				ST		4						
				44538		4						
				Main Warehouse								
				ST88		20						
				55571		20				4X	M-L 10/03/10	
M7075T6B1.000X1.000		Purchased	No				f	16.0700	6.1231			
7075 T6 BAR 1.00 x1.00												
				Warehouse Location		Loc Qty		Loc Code				
				Main Warehouse								
				MAT		16.07						
				107984		4.07						
				113796		12				4.0	JL 10/03/07	

Dart Aerospace Ltd

W/O:		WORK ORDER CHANGES					
DATE	STEP	PROCEDURE CHANGE	By	Date	Qty	Approval Chief Eng / Prod Mgr	Approval QC Inspector

Part No: _____ **PAR #:** _____ **Fault Category:** _____ **NCR:** Yes No **DQA:** _____ **Date:** _____

Resolution: _____ **Disposition:** _____ **QA: N/C Closed:** _____ **Date:** _____

NCR:		WORK ORDER NON-CONFORMANCE (NCR)						
DATE	STEP	Description of NC Section A	Corrective Action Section B			Verification Section C	Approval Chief Eng	Approval QC Inspector
			Initial Chief Eng	Action Description Chief Eng	Sign & Date			

NOTE: Date & initial all entries

H:\fFORMS\Quality Assurance\approved QA\NCRWO RevE

Picklist Print

March 4, 2010 11:02:56 AM

Work Order ID: 56668

Parent Item: D3696-041

Parent Item Name: Arm Assembly

Start Date: 3/04/10 **Required Date:** 3/12/10

Comments: IPP Rev:A New Issue 08-05-01 JLM Verified By:EC
IPP Rev:B 08-07-22 redesign part (prelim) DD verified by:EC

Start Qty: 4.00 **Required Qty:** 4.00

Component Item ID/ Item Name	Replacement Item ID	Mfg/ Purch	Bin Item	Primary Location	Last Location	Route Seq ID	Unit of Measure	Qty on Hand	Remaining Qty To Pick	Qty Issued	Date Issued	Status
MS21209C8-20		Purchased	No				Each	160.0000	4.0000			
Heli Coil Insert												

Warehouse Location	Loc Qty	Loc Code
Main Warehouse		
ST	160	
108066	160	

~~4X~~ M-L 10/03/10

Dart Aerospace Ltd

W/O:		WORK ORDER CHANGES					
DATE	STEP	PROCEDURE CHANGE	By	Date	Qty	Approval Chief Eng / Prod Mgr	Approval QC Inspector

Part No: _____ **PAR #:** _____ **Fault Category:** _____ **NCR:** Yes No **DQA:** _____ **Date:** _____

Resolution: _____ **Disposition:** _____ **QA: N/C Closed:** _____ **Date:** _____

NCR:		WORK ORDER NON-CONFORMANCE (NCR)						
DATE	STEP	Description of NC Section A	Corrective Action Section B			Verification Section C	Approval Chief Eng	Approval QC Inspector
			Initial Chief Eng	Action Description Chief Eng	Sign & Date			

NOTE: Date & initial all entries

H:\fFORMS\Quality Assurance\approved QA\NCRWO RevE

DART AEROSPACE LTD	Work Order:	56668
Description: arm	Part Number:	D3696-1
Inspection Dwg: D3696 Rev: C		Page 1 of 1

FIRST ARTICLE INSPECTION CHECKLIST

[X] First Article [ ] Prototype

Drawing Dimension	Tolerance	Actual Dimension	Accept	Reject	Method of Inspection	Comments
Ø.201	+.005 -.001	.201	✓			
Ø.500 x .300 deep	±.010	.500 x .300	✓			
5.500	±.010	5.500	✓			
.495	±.010	.494	✓			
.990	+0 -.010	.988	✓			
1.000	±.010	1.001	✓			
Ø.566	+.001 -0	.566	✓			
.500	±.010	.498	✓			
1.800	±.010	1.800	✓			
1.250	±.010	1.250	✓			
17.50	±.030	17.50	✓			
.750	±.010	.750	✓			
.06 x 45°	±.030 ± .5°	.06 x 45°	✓			
.13 x 45°	±.030 ± .5°	.130 x 45°	✓			

Measured by:	JL	Audited by:	SB	Prototype Approval:	N/A
Date:	10/03/07	Date:	10/03/08	Date:	N/A

Rev	Date	Change	Revised by	Approved
A		New Issue	KJ/JLM	

ITEM	QTY -041	P/N	DESCRIPTION
1	X	D3696-041	ARM ASSEMBLY
5	1	D3696-1	ARM
6	1	D3799-1	OILITE BRONZE BUSHING
7	1	D3801-3	HAND RETRACTABLE SPRING PLUNGER
11	1	MS21209C8-20	HELI-COIL, SCREW LOCKING (RED)

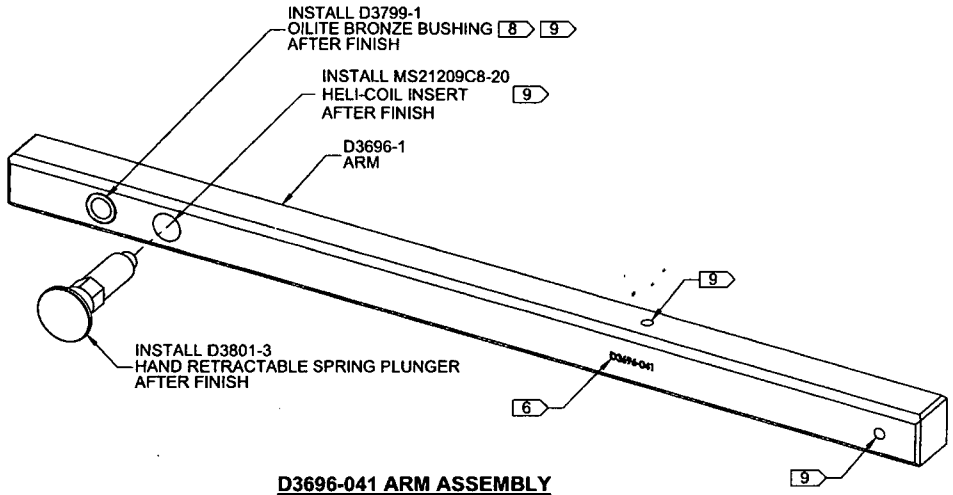

D3696-041 ARM ASSEMBLY

RELEASED

D3696-041 NOTES:
1) MATERIAL: N/A
2) FINISH: CHEMICAL CONVERSION COAT PER DART QSI 005 4.1
POWDER COAT GREY SANDTEX (4.3.5.6) PER DART QSI 005 4.3
3) TOLERANCES: PER DART QSI 018 UNLESS OTHERWISE NOTED
4) UNITS: INCHES UNLESS OTHERWISE NOTED
5) BREAK SHARP EDGES:N/A
6) IDENTIFICATION: IDENTIFY WITH DART P/N "D3696-041" USING FINE POINT PERMANENT INK MARKER LOCATED APPROXIMATELY AS SHOWN
7) WEIGHT: 1.69 lbs
8) FACE D3799-1 OILITE BRONZE BUSHING FLUSH TO D3696-1 ARM AS REQUIRED ON BOTH SIDES PRIOR TO POWDER COATING
9) MASK HOLES AS SHOWN PRIOR TO POWDER COATING

REV.	DESCRIPTION	BY	DATE
C	REVISED ITEM 5 AS FOLLOWS: 'Ø0.201 THRU CBORE Ø0.500 X 0.300 DP' WAS 2 PL (ZN C4-2). REASON: REDESIGNED ARMREST CUSHION BASED ON FEEDBACK FROM END USERS AT HAI 2009	MB	09.06.17
B	P/N D3799-1 WAS BNT-137 (ZN D6-1); P/N D3801-3 WAS PRT-12 (ZN C7-1) - REASON: PURCHASED PARTS NOW PROCURED THROUGH D3799 AND D3801 SPEC CONTROL DRAWINGS; ADDED Ø0.201 HOLE AND CBORE (ZN C6-2 AND D5-2); 17.50 WAS 19.50 (ZN B5-2); 1.000 WAS 0.990 +0.000/-0.010 (ZN C2-2); POCKETS REMOVED REASON: ELIMINATED FWD-AFT ARMREST ADJUSTMENT	MB	08.07.17
A	NEW ISSUE	MB	08.04.18

DESIGN	
DRAWN	
CHECKED	
MFG. APPR.	
APPROVED	
DE APPR.	
DATE	09.06.17

DART AEROSPACE LTD
HAWKESBURY, ONTARIO, CANADA

DRAWING NO. D3696 — REV. C — SHEET 1 OF 2

TITLE: ARM ASSEMBLY — SCALE: NTS

.283
.261
.544

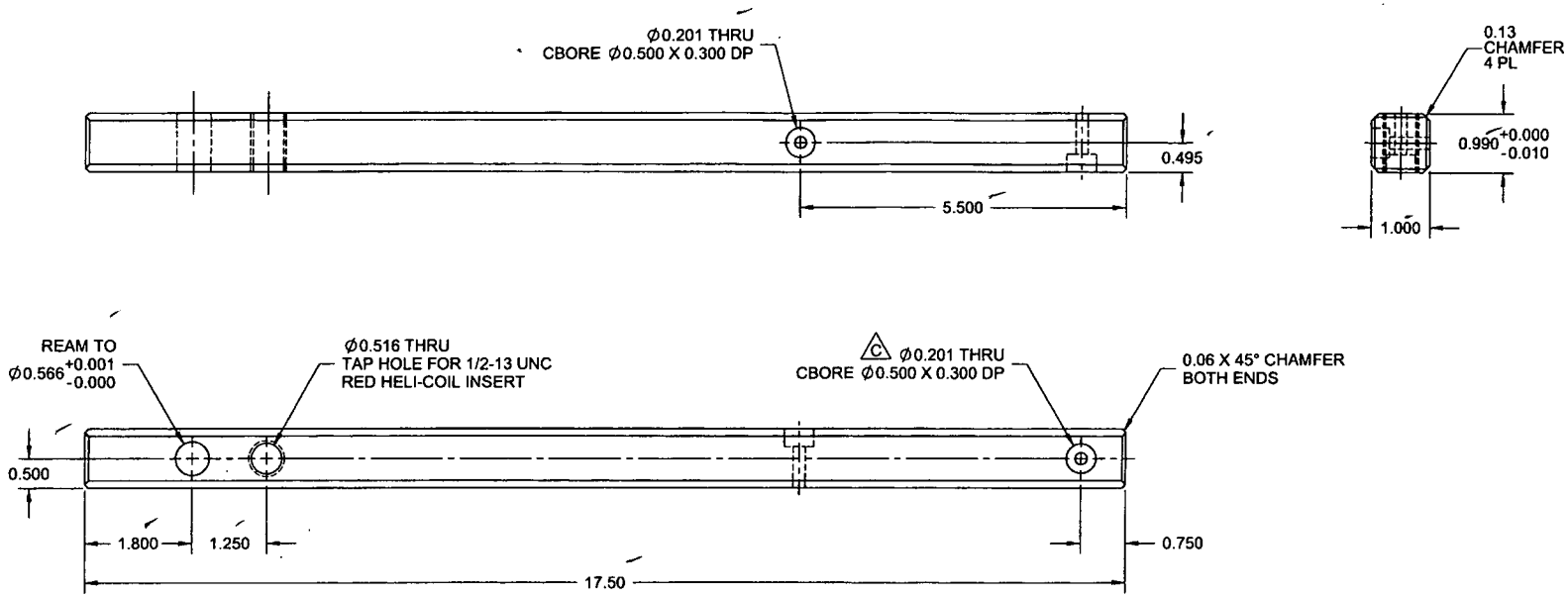

D3696-1 ARM

RELEASED

D3696-1 NOTES:
1) MATERIAL: 7075-T6 (OR T651/T6510/T6511/T62) ALUMINUM BAR
PER AMS-QQ-A-225/9 (OR AMS 4122/4123/4186/4187) OR
PER AMS-QQ-A-200/11
REF. DART SPEC. M7075T6B
2) FINISH: SEE SHEET 1
3) TOLERANCES: PER DART QSI 018 UNLESS OTHERWISE NOTED
4) UNITS: INCHES UNLESS OTHERWISE NOTED
5) BREAK SHARP EDGES: 0.005 TO 0.010 MAX
6) IDENTIFICATION: NONE
7) WEIGHT: 1.63 lbs

DESIGN		DART AEROSPACE LTD HAWKESBURY, ONTARIO, CANADA
DRAWN		
CHECKED		DRAWING NO. D3696 — REV. C — SHEET 2 OF 2
MFG. APPR.		
APPROVED		TITLE: ARM ASSEMBLY — SCALE: NTS
DE APPR.		
DATE	09.06.17	